Specifications

Features
- Unique - Zero Battery consumption
- Protection (PV & Batt), against short-circuit & reverse polarity, overload, over temperature & battery removal
- Can charge a completely discharged battery
- Extreme design –40° to +70°C (-40° to +160°F)
- Series design (not shunt)
- Reliable - 100% solid state
- No radio interference
- Silent
- No need to derate
- Temperature compensation (.028V/C or .016V/F)
- Fully encapsulated in epoxy potting
- 5 year warranty
- Manufactured with solar power
- Designed and built in North America

Model ASC 50W

Electrical Specifications
12 volts (custom voltages 6 to 20 volts)
Status Lights: 1 LED (charging)
Max. PV open circuit voltage 30 volts
Max. Charging current (at 50 °C) 3.5 amps DC
Typical solar consumption 7 mA daylight only, 0.5mA when in standby
Battery consumption zero, 0.0 mA
Min. Battery voltage to begin charging 2.5 Volts
Regulation method Low frequency On-Off series type
Typical set points: Off: 14.1 Volts On: 13.3 Volts, Temperature Compensated.

General Specifications
Temperature range: –40° to +70°C -40° to +160°F
Case: ABS case, completely sealed in epoxy
Weight: 50 grams (approx. 2oz)
Size(H x W x D): 3.8 x 7.0 x 3.1 cm (1.5 x 2.75 by 1.3 inches)
Wire: 18 gauge leads 5 inches long
Mounting: wall mountable

Features & Options
Custom voltage setpoints
Optional Dual Battery Charging
Custom wire lead lengths

Full 5-Year Warranty
Warranted in entirety, except abuse, within a period of 5 years following the date of purchase. In the event a defect develops during the warranty period, return the unit to eco energy, postage paid. Eco energy will repair or replace the product with a new or reconditioned unit of equivalent quality.

Eco Energy
Since 1992, Eco Energy has been in the business of designing and manufacturing solar charge controllers, battery chargers, low voltage disconnects, current boosters DC converters and battery voltage monitors.

Eco Energy controls are currently used in power systems for remote homes and cottages, recreational vehicles, boats, telecommunication and navigational systems, natural gas pipeline operations and other solar battery charging applications around the world.

Eco Energy has a 6.5 KW array which is used to help manufacture our controls.

eco energy

57 Alexander Street
Belleville Ontario
Canada K8N 2H4
Phone: 613 962-9889
Fax: 613 962-9889
Email: info@eco-energy.ca
www.eco-energy.ca

Printed Jan. 2014

Installation Guide

ASC 50W

50 Watt Advanced Solar Controller

With Temperature Compensation

eco energy

Intelligent Charging Solutions

ASC 50W

Our latest innovation in solar charge controllers, the Advanced Solar Controller series. Tough, easy to install and practically indestructible.

This high performance solar charge controller increases battery life by preventing overcharging. Overcharging can cause corrosion and buckling of the lead plates, increased battery water loss and excess hydrogen gas.

The control also prevents power loss back into the solar modules at night, so an external blocking diode is not required.

Unique no battery drain - Battery standby power consumption is zero! In the dark they use absolutely zero power, ideal for PV systems where efficiency is important. Boaters can leave it connected all winter without draining the batteries. Some other controls which have a standby current draw will drain the battery over the winter with no solar input, reducing the freeze protection of the battery.

Efficient Design – our latest innovation; automatic nighttime shutdown with an intelligent design results in the controller using < 1/10th the power of the industry average. Other controls stay on all night, wasting precious power. Save up to 10% more power from a 5 Watt module.

Safer - Our controls have more built in protection and safety features than any others on the market. They feature automatic over-temperature shutdown, protection from battery removal conditions, over-current, solar and battery reverse polarity, short circuit and over-voltage protection of the inputs and outputs. Eco Energy is the first to combine all of these safety features into one controller. In remote applications, there is no need to worry about accidentally damaging the controllers.

Many innovations in a new design. Going solar with confidence has never been easier.

Installation

Location
The controller needs to be in a cool location in order to function properly. It should not be in direct sunlight, or mounted in a hot location such as the back of a solar module. The controller should be installed near the batteries, to ensure an accurate battery voltage measurement. The distance from the solar panels to the controller should not exceed 60 feet.

Wiring
#12 AWG or larger wire should be used.

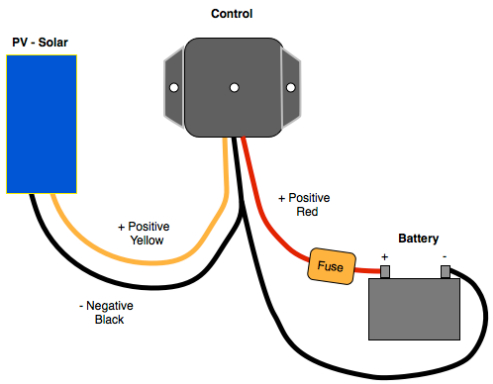

The optional dual battery charger has two red wires and is wired as follows:

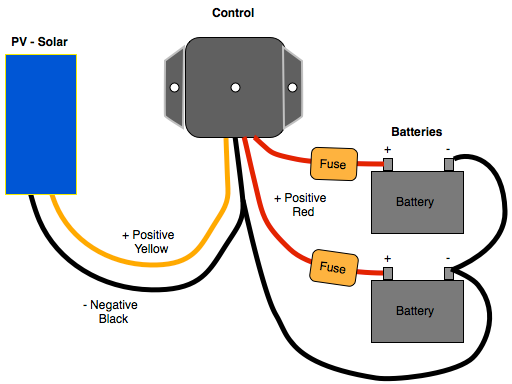

Operation

The controller protects batteries from overcharging. It allows solar power to charge the battery until the battery rises to the full voltage set point. It then shuts off the solar power until the battery voltage drops by approximately 5%.

Because the battery voltage fluctuates, it is normal for the charging light to turn on and off as the battery approaches full charge.

At night the control shuts down to save power.

Fault Conditions
The charging light is off to indicate a fault during solar short circuit, solar or reversed battery, over-temperature and battery short circuit conditions.

The control will not be damaged if battery is removed, leaving the control directly connected to the solar module. In this case the charging light turn on briefly when the solar module first turns on.

Basic Testing
Connect the control directly to a solar module (in bright sunlight) without a battery. The charging light should come on briefly, and then go out.

If this does not occur the control requires service.

The charging light should go out when the battery voltage reaches 14.2 volts at 22C (72F).

Do not connect a power supply (other than a solar module) to the solar input. Many power supplies are too slow to current limit, resulting in massive & damaging currents though the controller.